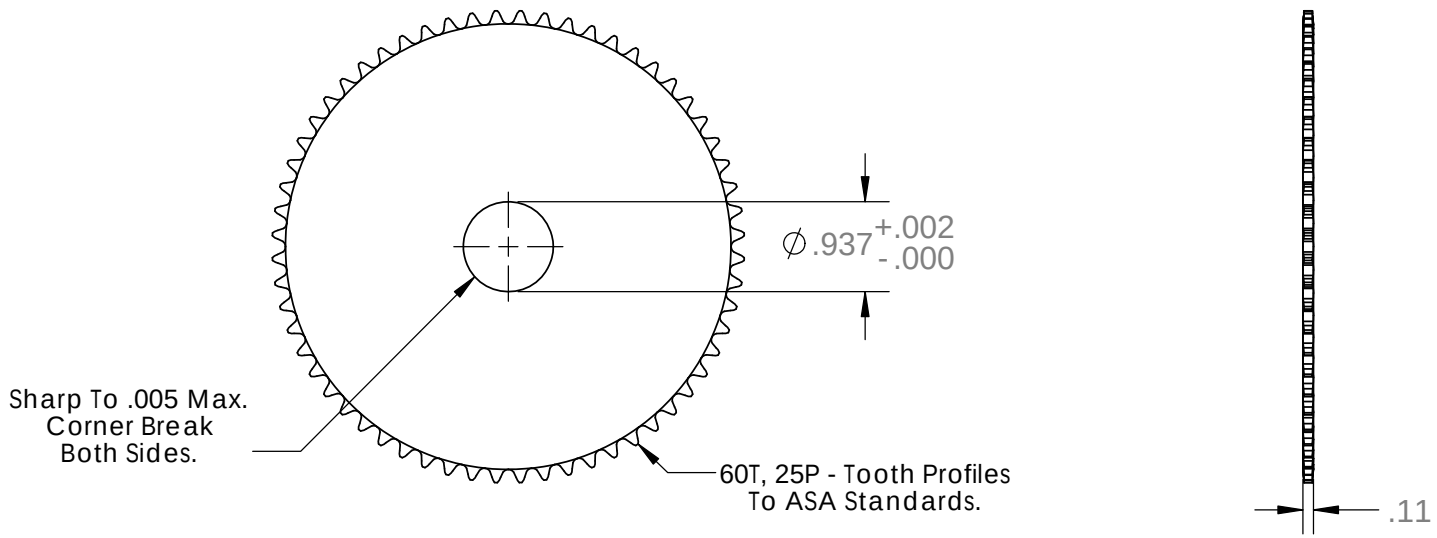

REV	DESCRIPTION	DATE
A	Redraw.	8/29/12

UNLESS OTHERWISE SPECIFIED:

DIMENSIONS ARE IN INCHES
TOLERANCES:
FRACTIONAL ±.010
TWO PLACE DECIMAL ±.010
THREE PLACE DECIMAL ±.005

PROPRIETARY AND CONFIDENTIAL

THE INFORMATION CONTAINED IN THIS DRAWING IS THE SOLE PROPERTY OF HELANDER PRODUCTS, INC. ANY REPRODUCTION IN PART OR AS A WHOLE WITHOUT THE WRITTEN PERMISSION OF HELANDER PRODUCTS, INC. IS PROHIBITED.

60T, 25P Sprocket

DRAWN BY: P3

MATERIAL: Steel

Tiny-Clutch

Helander Products, Inc.
Clinton, Connecticut
www.TinyClutch.com
P = 860-669-7953 | F = 860-669-6756

SIZE	DWG. NO.	REV
A	1476	A

SCALE: 1:2 | DATE: 8/29/2012 | SHEET 1 OF 1

5 4 3 2 1