DRG.: NOT TO SCALE. ASK IF DOUBT

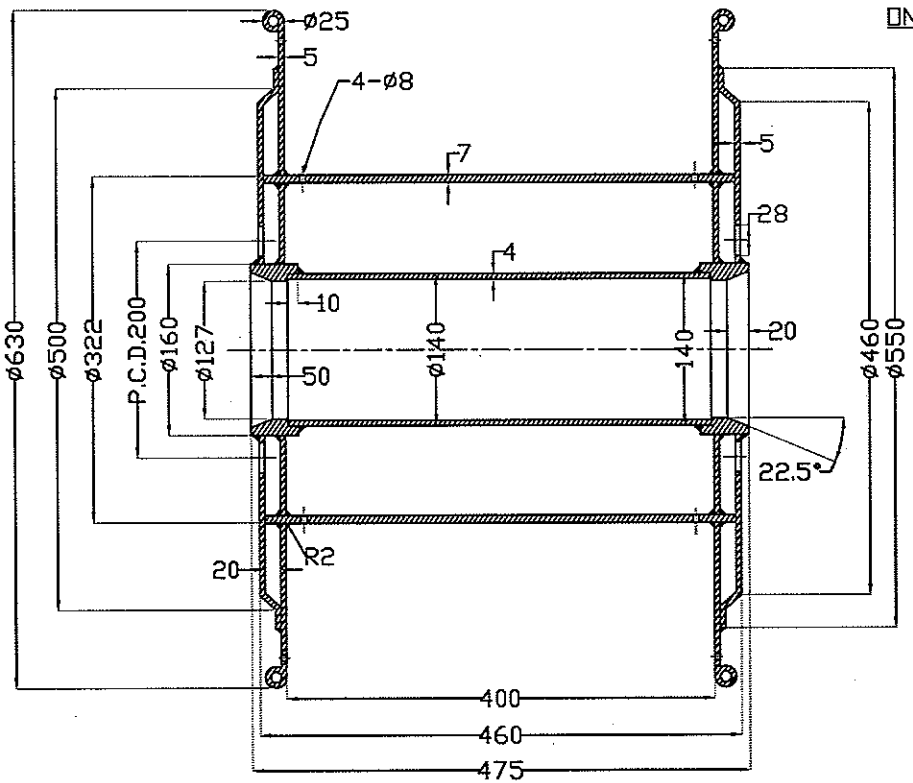

SECTIONAL FRONT VIEW

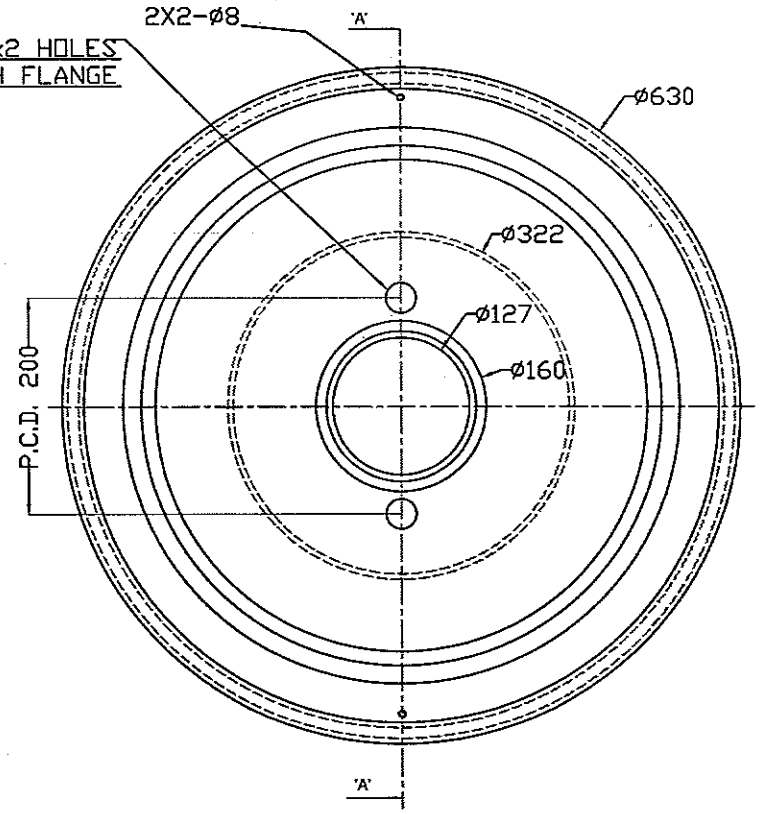

SIDE VIEW (SECTION A-A)

● CRITICAL PARAMETER

REV. NO.	MODIFICATION	DATE	SIGN.

ALL DIMENSION ARE IN M.M.

WEIGHT OF PRODUCT	
CUSTMER	
CUSTMER DRG. NO.	------
REFRENCE	------
UNSPECIFIED TOLERANCE	
ANGLE: ±2°	LINEAR: ±0.5

	NAME	DATE
DRN. BY.		27/12/2019
CKD. BY.		
APPD. BY.		
MAT.	MILD STEEL	

DESCRIPTION:

DOUBLE LAYER PND ø630x400x5Th

DRG. NO:-

REV. NO